COMTEX CS-1000DX

USER MANUAL

Downloaded From www.cbradio.nl

RADIO USER'S MANUAL
Comtex CS-1000DX

TABLE OF CONTENTS

WARNIGN

RESET FUNCTION

FUNCTIONS & FEATURES

INSTALLATON

Where and how to Mount Your CB Radio

Antenna Installation

Power Connection

Basic Operation

Adjustment of SWR (Standing Wave Ratio)

HOW TO USE YOUR CB

LCD DISPLAY

FRONT PANEL

PEAR PANEL

PRESS-TO-TALK MICROPHONE

FUNCTION MENU SETUP

OPERATING PROCEDURE TO RECEIVE

OPERATING PROCEDURE TO TRANSMIT

SPECIFICATION

WARNIGN

To use the radio, please connect the antenna to the location "B" on the back panel of the equipment firstly and then set the SWR (Standing Wave Ratio) before transmitting. Failure to do so may result in destruction of the power amplifier, which is not covered by the guarantee.

Welcome to Use

Welcome to the world of new CB radios. The new AT-5555 Radio provides you with top

performance and best visual enjoyment. With the use of SMT technology to guarantee the best stability, reliability and unprecedented quality, your multi-functional AT-5555 Radio 10-meter Radio is a new step in personal communication and is surely the best choice for professional users of CB radios. Moreover, with multiple connecting ports in the radio, AT-5555 Radio is ready for future upgrading and functions expanding. To ensure that you use the radio to the fullest, please read this manual carefully before installing and using your AT-5555 Radio.

RESET FUNCTION (Resume Factory Default)

This CB Radio introduces RESET FUNCTION to prevent accidents and provide a solution for customers who changed some functions unconsciously and do not know how to resume normal settings. The CB Radio will resume factory default once this function is activated.

How to Operate:

Step 1: Power off the radio

Step 2: Press and hold FUNC and SCAN keys at the same time, then release followed by power on the radio.

Step 3: Release the two keys when LCD displays "RES".

All former settings would be replaced by Factory Default value when LCD displays "REND"

WARNING: All former settings would be replaced by Factory Default value after operating the RESET FUNCTION.

FUNCTIONS & FEATURES

1. Big LCD which displays frequency and all kinds of information

2. DUAL-DIGITAL TUBE FOR CHANNEL DISPLAY

3. USE EL technology for backlight

4. PA、CW、AM、FM、USB、LSB mode

5. A、B、C、D、E、F , 6 bands in total, with 60 channels at most in each band to be programmed.

6. Frequency Tuning Step can be 10HZ, 100HZ, 1KHZ or 10KHZ.

7. Multiple CLARIFIER Operating Modes

8. Flexible menu functions and PC programming software to meet varied customer demands

9. ECHO Function

10. SQ, ASQ Function (FM and AM mode only)
11. RF GANI ADJUSTMENT
12. RF PWR ADJUSTMENT
13. SCAN FUNCTION
14. RB FUNCTION
15. NB/ANL FUNCTION
16. DW DUAL-WATCH FUNCTION
17. BEEP VOICE PROMPT
18. +10KHZ Function
19. SWR、S/RF、DC Voltage display function
20. TOT function
21. HI－CUT FUNCTION
22. EMG CALL
23. SWR PROTECTION
24. POWER SUPPLIED VOLTAGE PROTACTION
25. Key-Lock Function

INSTALLLATON

1）WHERE AND HOW TO MOUNT YOUR MOBILE CB RADIO

a) You should choose the most appropriate setting from a simple and practical point of view
b) Your CB radio should not interfere with the driver or the passengers.
c) Remember to provide for the passing and protection of different wires (e.g.: power, antenna, accessory cabling) so that they do not in any way interfere with the driving of vehicles.
d) To install your equipment, use the cradle (**1**) and the self-tapping screws [**2**] provided (drilling diameter 5 mm). Take care not to damage the vehicle's electrical system while drilling the dash board.
e) Do not forget to insert the rubber joints [**3**] between the CB and its support as these have a shock-absorbing effect which permits gentle orientation and tightening of the

set.

f) Choose where to place the microphone support and remember that the microphone cord must stretch to the driver without interfering with the controls of the vehicle.

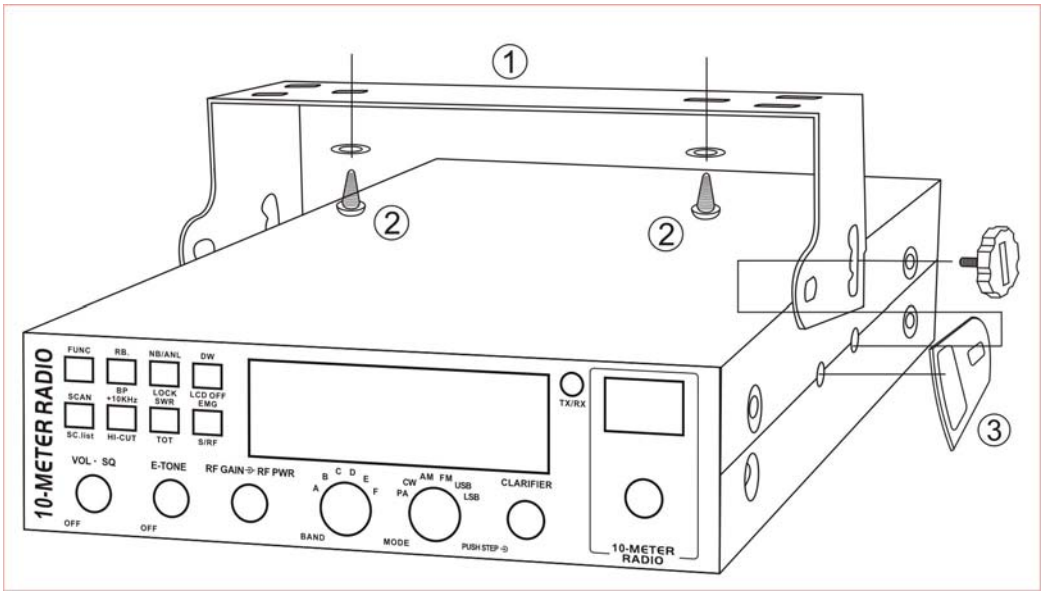

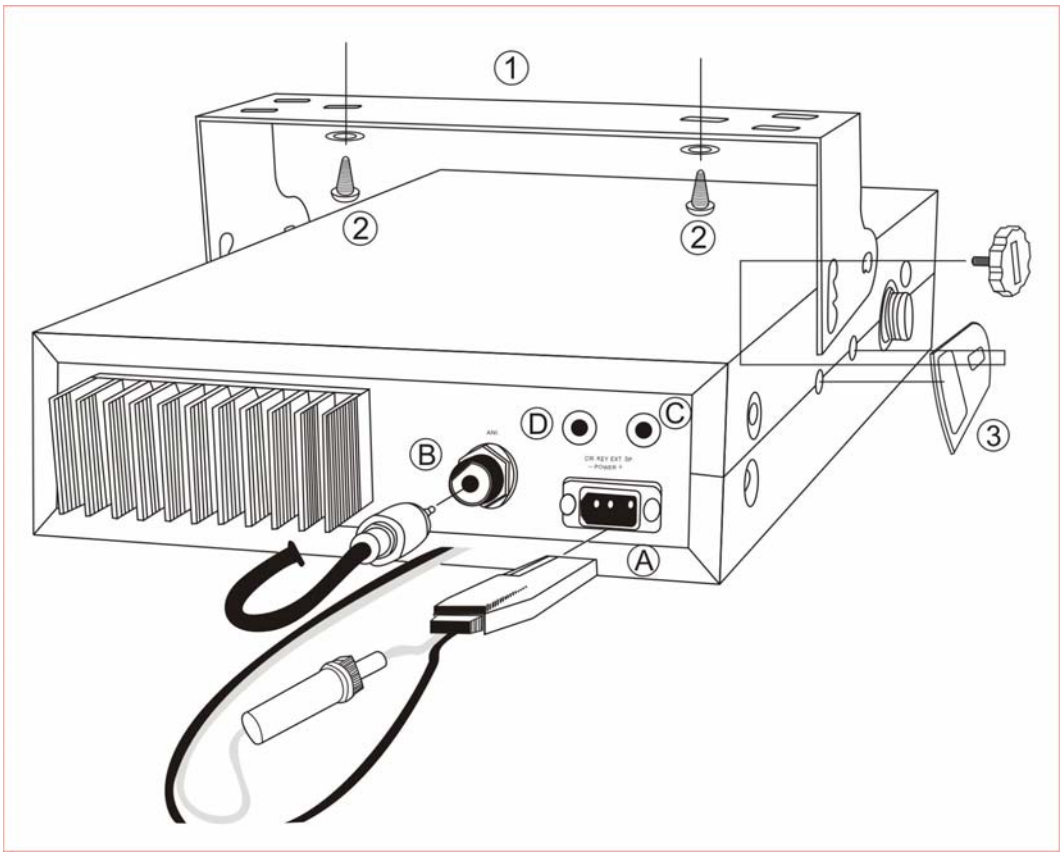

2) ANTENNA INSTALLATION

a) Choosing your antenna:

For CB radios, the longer the antenna, the better its results. Your dealer will help you with

your choice of antenna.

b) Mobile antenna:

-Must be fixed to the vehicle where there is a maximum of metallic surface(ground plane) , away from windscreen mountings.

-There are two types of antenna: Pre-Regulated Antenna which should be used on a good ground plane (e.g. car roof or lid of the boot), and Adjustable Antenna which offer a much larger frequency range and can be used on a smaller ground plane.

For an antenna which must be fixed by drilling, you will need a good contact between the antenna and the ground plane. To obtain this, you should lightly scratch the surface where the screw and tightening star are to be placed.

-Be careful not to pinch or flatten the coaxial cable (as this runs the risk of break down and/or short circuiting).

-Connect the antenna to location (**B**).

c) Fixed antenna:

A fixed antenna should be installed in a space as clear as possible. If it is fixed to a mast, it will perhaps be necessary to stay it, according to the laws in force (you should seek professional advice). All AT-5555 antennas and accessories are designed to give maximum efficiency to each CB radio within the range.

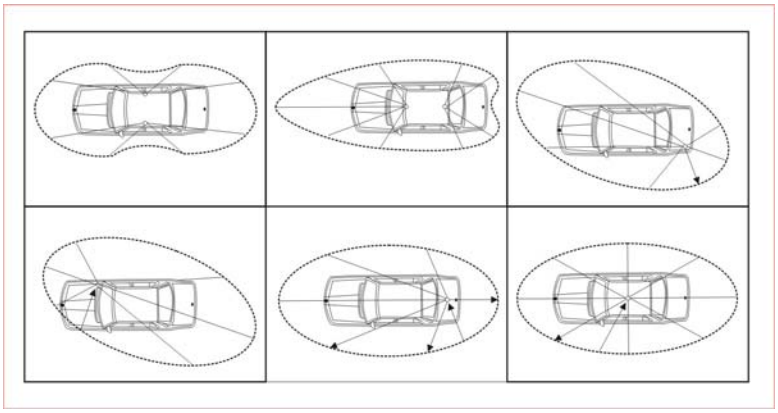

3) POWER CONNECTION

Your RADIO is protected against an inversion of polarities. However, before switching it on, you are advised to check all the connections. Your equipment must be supplied with a continued current of 12 volts (**A**). Today, most cars and lorries are negative earth. You can check this by making sure that the negative terminal of the battery is connected either to

the engine block or to the chassis. If this is not the case, you should consult your dealer.

WARNING: Lorries generally have two batteries to supply a voltage of 24 volts, in which case it will be necessary to insert a 24/12 volt converter into the electrical circuit. The following connection steps should be carried out with the power cable disconnected from the set.

a) Check whether the battery is of 12 volts.

b) Locate the positive and negative terminals of the battery (**+** is red and **–** is black). Should it be necessary to lengthen the power cable, please use the same or a superior type of cable.

c) It is necessary to connect your CB to a permanent (**+**) and (**-**). We advise you to connect the power cable directly to the battery (as the connection of the CB cable to the wiring of the car-radio or other parts of the electrical circuit may, in some cases, increase the possibilities of interference).

d) Connect the red wire (**+**) to the positive terminal of the battery and the black (**-**) wire to the negative terminal of the battery.

e) Connect the power cable to your CB radio.

WARNING: Never replace the original fuse (10A) by one of a different value.

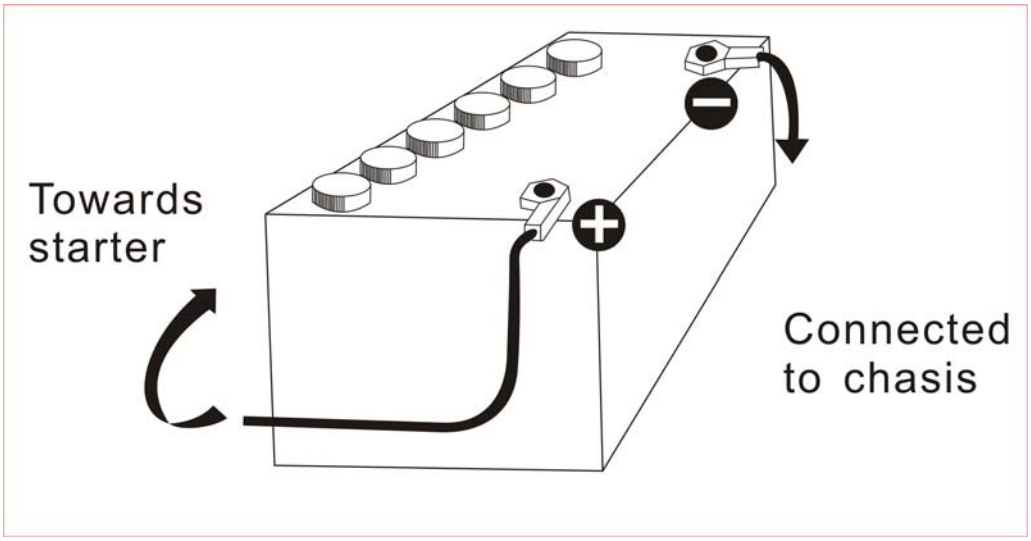

4）BASIC OPERATIONS TO BE CARRIED OUT BEFORE USING YOUR SET FOR THE FIRST TIME*(without transmitting or using the <<Push-To-Talk>> switch on the microphone)*

a) Connect the microphone

b) Check the antenna connections

c) Turn the set on by turning the volume knob clockwise

d) Turn the squelch knob to minimum

e) Adjust the volume to a comfortable level

f) Go to channel 20@D band by using either the UP or DN key on the microphone or the rotary knob.

5）ADJUSTMENT OF SWR(standing wave ratio)

WARNIGN: This must be carried out when you use your CB radio for the first time (and whenever you re-position your antenna). The adjustment must be carried out in an obstacle-free area.

5) Adjustment with a built-in SWR meter or external SWR meter

a) To connect the SWR meter

Connect the SWR meter between the CB radio and the antenna as close as possible to the CB radio (use a maximum of 40cm cable)

b) To adjust the SWR meter

-Set the CB to channel 20@D band in FM

-put the switch on the SWR meter to position CAL or FWD

-Press the <<Push-To-Talk>> switch on the microphone to transmit

-Bring the index needle to ▼ by using the calibration key

- Change the switch to position SWR (reading of the SWR level). The reading on the meter should be as near as possible to 1. If this is not the case, re-adjust your antenna to obtain a reading as close as possible to 1.(An SWR reading between 1 and 1.8 is acceptable).

-It will be necessary to re-calibrate the SWR meter after each adjustment of the antenna.

6) HOW TO USE INTERNAL SWR METER

-Set CB to channel 20@D band in FM

-Press <<push-to-talk>> button on the microphone to transmit

-At the moment, LCD would display SWR value which should be as close as possible to 1. If this is not the case, re-adjust your antenna to obtain a SWR value as close as possible

to 1 (an SWR reading between 1 and 1.8 is acceptable).

HOW TO USE YOUR CB RADIO

<LCD Display>

7 digits: Display frequency and any other information

Indicating bars: Indicate RX, RSSI, PA, PWR, SWR

The first decimal point: Appears when current channel is edited with SCAN DEL.

FUNC：Appears after pressing FUNC key

AQ：Appears when ASQ function is started (only for AM/FM)

RB：Appears when Roger beep function is started (enabled)

NB/ANL: Appears when NB/ANL function is started (enabled)

BP：Appears when BP function is started (enabled)

ECHO: Appears when ECHO function is started (enabled)

VOIC: Appears when VOIC function is started. It is disabled in this CB radio.

HI－CUT：Appears when HI－CUT function is started

DW: Appears when DW function is started

10K: Appears when +10KHZ function is started

EMG: Appears when EMG channel is used

SWR: Appears when SWR is used

SRF: Appears when S/RF is used

SC: Appears when SCAN is used

PA、CW、AM、FM、USB、LSB: Indicate different operating modes

1. Appears when CLARIFIER function is FINE operation.

2. Appears when CLARIFIER FUNCTION is COARSE operation or RT operation.

3. Appears when CLARIFIER FUNCTION is transmitting frequency regulated.

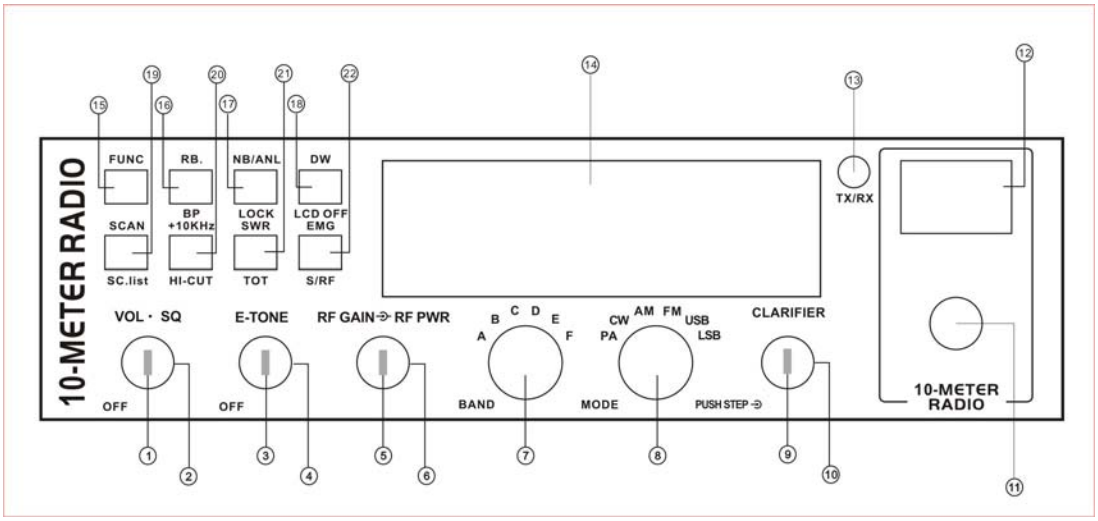

<FRONT PANEL>

1. **OFF/ON/VOLUME（Inner Dual Concentric）.**

Turn clockwise to switch on the CB radio and set desired volume level. Under normal operating state, the VOLUME control is used to adjust the output volume obtained either by the transceiver speaker or the external speaker or the external PA speaker, if used.

2. **SQUELCH (Outer Dual Concentric)**

This control is used to cut off or eliminate receiver background noise in the absence of an incoming signal. For maximum receiver sensitivity, it is desired that the control be adjusted only to the point where the receiver background noise or ambient background noise is eliminated. Turn fully anticlockwise then slowly clockwise until the receiver noise disappears. Any signal to be received must now be slightly stronger than the average received noise. Further clockwise rotation will increase the threshold level which a signal must overcome in order to be heard. Only strong signals will be heard at a maximum clockwise setting.

3. **ECHO（Inner Dual Concentric）**

This switch is used to control echo effect.

4. **TONE (Outer Dual Concentric)**

This switch is used to control intervals of echo sound

5. **RF GAIN（Inner Dual Concentric）**

This switch is for adjusting sensitivity during reception. For long distance communications **RF GAIN** should be set to maximum. RF GAIN can be reduced to avoid distortion, when your correspondent is close by and when he does not have RF POWER. The normal setting of this function is on maximum (fully clockwise).

6. RF POWER (Outer Dual Concentric)

Adjustment of the output power is for AM and FM mode only. Reducing the power is allowed when communicating with a person who has no **RF GAIN**. The normal position of this function is set to maximum, fully clockwise.

7. BAND SELECTOR

Rotate this switch to select A, B, C, D, E, F band of operation

8. MODE(PA/CW/AM/FM/USB/LSB)

This switch allows selecting the modulation mode PA, CW, AM, FM, LSB or USB. Your modulation mode has to correspond with the one of your correspondent. The mode selector changes the mode of operation of both transmitter and receiver simultaneously.

Frequency Modulation / FM: for nearby communications on a flat open field.

Amplitude Modulation / AM: Communication on a field with relief and obstacles in middle distance (the most used).

Upper and Lower Side Band / USB-LSB: Used for long distance communications (according to the propagation conditions).

9. CLARIFIER

This is frequency tuning knob which can be set as different modes (refer to CLA Specifications in Functions Menu for more details)

10. PUSH

This is PUSH Key which can be set as different modes (refer to PSH specifications under Functions Menu for more details)

11. CHANNEL SELECTOR

Rotate this switch to select any desired channel from forty citizens band channels. The selected channel appears on the LED directly above the channel selector knob.

12. CHANNEL INDICATOR

Numbered LED indicates the selected channel you wish to operate on.

13. RECEIVER/TRANSMIT INDICATOR

When it is receiving, the LED will be green. The LED will be red when it is transmitting.

14. LCD DISPLAY

Display frequency, all kinds of information and icons.

15. FUNC

This is functional key. Press and hold this key for 2seconds to enter into Functions Menu Setup (refer to Functions Menu for more details). Press FUNC key and other individual key to realize the second functions silk-screened under the button. For example, press FUNC key followed by pressing RB key to realize the BP function. Press FUNC key followed by DW to realize the LCD OFF function.

Details operations are as bellows:

Press FUNC key, “FUNC” icon will appear on LCD display. Release FUNC key, and then press other keys to realize the second functions silk-screened under the button. “FUNC+ Keypad name” is to be used in the following operating instruction.

16. ROGER BEEP OR BEEP FUNCTION

①RB

Press “RB” key to enable “RGOER BEEP” function with “RB” icon appearing on LCD display. Press the key repeatedly to switch on/off the function.

When RB function is enabled, the radio will automatically transmit the audio signal at the end of your transmission. The listener can note easily that your transmission is over through the signal.

②FUNC＋RB

Press FUNC+RB to realize to realize BP Function. It is a prompting function with “BP” icon appearing on LCD display. Speaker would emit a BEEP for prompting when press any key. press FUNC＋RB repeatedly to switch on/off the function.

17. NB/ANL or LOCK

①Press NB/ANL key to enable NB/ANL function with “NB/ANL” icon appearing on the LCD display. Press the key repeatedly to switch on/off the function.

Noise Blanker/Automatic Noise Limiter. These filters allow reducing back ground noises and some reception interferences.

② FUNC＋NB/ANL

Press FUNC＋NB/ANL to realize the Keyboard Lock function. When this function is enabled, all keys are invalid except PTT, BAND SWITCH, and MODE SWITCH. When pressing any key except PTT, BAND SWITCH, MODE SWITCH, the LOCK icon will display on the LCD. The situations indicate that the keyboard has been locked. Press FUNC＋NB/ANL repeatedly to switch on/off the function.

18. DW or LCD OFF

① The DW (dual watch) function allows automatic alternate monitoring of two channels. Refer to the following procedures to enable this function. To enable the DW function, firstly turn the SQ control clockwise until the background noise is cut out. Select the first channel to be monitored by using the CHANNEL SELECTOR knob or the channel selector keys on the microphone. Press the DW key and the DW icon will flash on the LCD display. Secondly, follow the above procedures to select second channel to be monitored. Finally, press the DW key again and the two monitoring channels will be alternately indicated on the LCD. Radio will automatically start monitoring (scanning) the two channels. When a signal is detected on one of the channels, scanning stops and it is possible to listen the communications on that channel. Press PTT to transmit on this channel. If there is no transmission or detected signal on that channel within 5 seconds（time to resume scanning can be programmed by PC software）, radio will resume scanning. When the DW function is enabled, the DW icon appears on the LCD. To exit the DW function, press the DW key or the PTT key.

The scan Type above is the SQ mode under SCA Selection in Function Menu. If TI mode is selected and valid signal is detected, the radio would still start scanning when it is time to resume scanning, whether there is signal or not in current channel.

②FUNC＋DW

When this function is enabled, LCD display would be switched OFF(LCD OFF).

Repeat this operation to switch ON/ OFF the function.

19. SCAN OR Scan.list

① SCAN

Automatic Scanning of busy channels

Press the SCAN key to enable the SCAN function. Before enabling the SCAN function, firstly turn the SQ control clockwise till the background noise is cut out. Then press the SCAN key, radio will automatically scan all channels continuously in the scan list and the SC icon will appear on the LCD.

When a signal is detected on a channel, scanning stops on this channel. You can receive the calling, and also, can transmit on this channel by pressing PTT key. If there is no transmission or detected signal on that channel within 5 seconds（time to resume scanning can be programmed by PC software）, radio will start scanning again. To exit the SCAN function, press the SCAN key or the PTT key.

The Scan Type above is the SQ mode under SCA Selection in Function Menu. If TI mode is selected and valid signal is detected, the radio would still start scanning when it is time to resume scanning, whether there is signal or not in current channel.

②FUNC＋SCAN

SC.LIST (Scan ADD or Delete). Press FUNC＋SCAN to delete current channel from scan list. The first digit on LCD would display. When Scan function is enabled, the radio would skip the deleted channel. Repeat this operation to Add or Delete channels from scan list.

20.＋10KHZ or HI-CUT

①＋10KHZ Press this key to shift frequency up by 10khz.

When pressing this key, 10KHZ would appear on LCD and frequency of channels is shifted up by 10 KHZ. Repeat this operation to switch ON/OFF this function.

②FUNC+＋10KHZ

Press FUNC+＋10KHZ to realize HI-CUT function. Once this function is enabled, the radio would cut out high frequency interference. Its use depends on reception conditions.

When this function is enabled, “HI-CUT” would appear on LCD. Repeat this operation to switch ON/OFF the function.

21. SWR OR TOT

①SWR

When pressing this key, “SWR” icon would appear on the LCD. When transmitting, SRF

bars indicate SWR value other than PA or PWR value. One bar displaying on the LCD indicates that SWR value is 1.0. Each additional bar indicates every 0.1 added value. Repeat this operation to switch ON/OFF the function.

② FUNC+＋SWR

When pressing this key, TOT ON or TOT OFF would display on the LCD for 2 seconds. Repeat this operation to switch ON/OFF the function. When ON appears on the LCD, users can press PTT to transmit. Then, the radio would time the transmitting duration. Once the duration is beyond the set TOT time (programmable), the radio would emit voice prompt and stop transmitting and back to receiving state automatically. This function aims to protect the radio against power tube damage from superheating caused by long transmission.

22. EMG OR S/RF

①. EMG realizes Emergency Channel Call. When emergent situation happens, the radio would switch to the channel set in advance to communicate immediately. Then the “EMG” icon would display on the LCD . Press EMG key again to return to previous channel.

②FUNC＋S/RF

S/RF is SRF indicating switch of TX OR RX. When this function is enabled, “SRF” icon would display on the LCD. Repeat the this operation to switch ON/OFF the function.

<REAR PANEL>

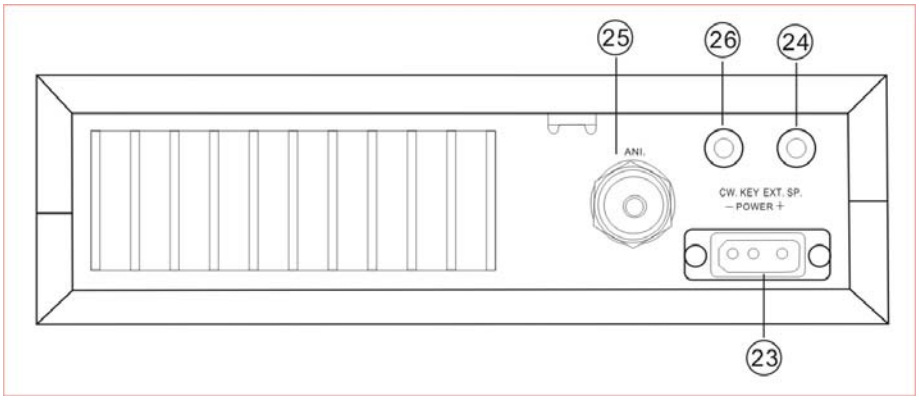

23. POWER

Accept13.8V DC power cable with built-in fuse (10 Amp) to be connected.

24. EXT SP or PA SP

EXT SP

Accept 4 to 8 ohm, 4 watt external speaker to be connected. When external speaker is connected to this jack, the built-in speaker is automatically disconnected.

PA SP

It is used to connect a PA speaker. Before operating PA, you must firstly connect a PA speaker to this jack.

25. ATTENNA

Accept 50 ohm coaxial cable with a type PL-259 plug to be connected.

26. CW KEY

This jack is for Morse code operation; To operate, connect a CW key to this jack and place the MODE switch in the CW position (LCD display icon “CW”)

<PRESS－TO－TALK MICROPHONE>

The receiver and transmitter are controlled by the Press-To-Talk switch on the microphone.

Press the switch to transmit and then release it to receive. When transmitting, hold the microphone two inches from the mouth and speak clearly in a normal “voice”. The radios come complete with low-impedance (150 ohm) dynamic microphone.

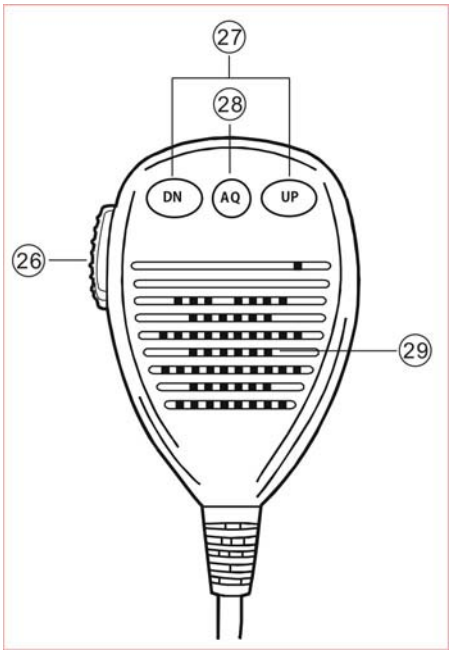

26. PTT

Transmitting key, Press to speak and release to receive a message.

27.UP/DN

These key allow increasing or decreasing a channel number.

28. AQ

① When the radio is receiving a call, press this key to enable ASQ (Automatic Squelch Control) function. Then, “AQ” would appear on the LCD. Press this key repeatedly to switch on/off the function.

② When the radio is receiving a call, press and hold this key for over 2 seconds to enable signal monitoring function. At the moment, whether the radio receive signal or not, the radio would detect current channel to check whether current channel has weak signal. Release AQ key to exit this function.

③ Pressing PTT and AQ key at the same time, the radio would emit a single-tone. This tone is to help and remind two sides of communication to adjust frequency. The frequency of this tone is adjustable.

④ ASQ (Automatic Squelch Control)

ASQ control setting. It has same function with AQ button on the microphone.

29. MICROPHNE

The radios come complete with low-impedance (150 ohm) dynamic microphone.

Function Menu Setup:

The initial functions and parameter can be changed via the following settings and operations. Please read the following instruction before making any

desired amendments.

To enter Function Menu: under ON state, press and hold FUNC key for more than 2seconds, and then release the FUNC key to enter into the Function Menu Setup. Under this condition, press FUNC key to select different functions menu, CHANNEL SELECTOR Switches to change the data of Function Menu.

① STP (Frequency Tuning Step)

This menu is to set tuning step when adjusting frequency by CLARIFIER knob

Options: 10HZ、100HZ、1KHZ、10KHZ

Default: 10HZ

②CLA (CLARIFIER knob functions setting

This menu is to set functions turned by CLARIFIER knob. Options are as follows:

FIN: Fine regulation. When this option is selected, users can fine tuning the receiving frequency by rotating the CLARIFIER knob. In tuning process, the transmitting frequency can not be regulated by the knob and “1” icon will appear on the LCD.

RT: When this option is selected, users can regulate the frequency of both transmitting and receiving. In tuning process, “2” icon will appear on the LCD.

T: When this option is selected, users can only regulate the transmitting frequency. In tuning process, “3” icon will appear on the LCD.

Default: RT

③PUS (PUSH Function Setting)

This menu is to set functions realized via PUSH knob. Options are as follows:

COA: When this option is selected, press PUSH and turn CLARIFIER knob to realize COARSE function.

When pressing this key, “2” icon will appear on far left of the LCD. Under this condition, rotate the CLARIFIER knob to change frequency of both transmitting and receiving.

T: When this option is selected, press PUSH and turn CLARIFIER knob to change transmitting frequency. When pressing this key, “3” icon will display on the far left of the LCD. Under this condition, rotate the CLARIFIER knob to change the transmitting frequency only.

STP: When this option is selected, PUSH function will change Frequency Tuning Step of CLARIFIER knob. Press this key, then the corresponding frequency bit would blink.

Default: STP

④ ASQ (Automatic Squelch Control)

ASQ control setting. It has same function with AQ button on the microphone.

Default: OFF

⑤ TOT (Transmitting Time-Out-Timer)

This menu is to set transmitting TOT time. When pressing PTT key at a single time longer than the due time setup in advance, the radio would stop transmitting automatically and loudspeaker will emit voice prompt till PTT key is released. Then, the radio can transmit again.

Options: 30-600s Step: 30s

Default: 180s

⑥SC Scanning Type Selection

This menu is to set Scan Type. Options are as follows:

SQ: When SQ is selected, scan would stop when a valid signal is detected. The radio would resume scanning after signal disappears for 5s.

TI: When TI is selected, scan would stop when a valid signal is detected. The radio would resume scanning 5 seconds later, whether signal disappears or not.

Default: SQ

⑦TSR (Transmitting SWR Protection)

This menu is to choose whether to enable Transmitting SWR Protection function or not.

ON: When ON is selected, the radio will detect the SWR of antenna. Once the SWR is beyond the SWR set in advance, the radio would prohibit transmitting automatically and loudspeaker will emit voice prompt. Then, “HI S” icon will display on the LCD to remind you that the antenna SWR is too high or antenna do not connect well.

OFF: When OFF is selected, SWR Protection function is disabled.

NOTE: To protect the radio from long transmission under high SWR, the radio would automatically start SWR Protection once the SWR Value is higher than 20:1.

Default: ON (SWR=<10:1)

⑧TDC (Power Supplied Voltage Protection)

This menu is to choose whether to enable Power supplied Voltage Protection function or not.

ON: When ON is selected, the radio will detect the supplied voltage. Once the voltage

surpasses the voltage setup in advance, the radio would display “DC LO” or “DC HI” to remind you that the voltage is not in normal state. Meanwhile, the radio will prohibit transmitting and emit beep prompt.

OFF: When OFF is selected, the Power Supplying Voltage is disabled.

Default: ON (DC 10.5V-16V)

⑨TLD (Content displayed on the LCD when transmitting)

This menu is to set the content displayed on the LCD when transmitting.

TF: When TF is selected, LCD would display transmitting frequency when transmitting.

SR: When SR is selected, LCD would display SWR value of antenna when transmitting, for example: “1.2” on the LCD.

BAT: When BAT is selected, LCD would display Supplied Voltage when transmitting, for example: “13.8DC” on the LCD.

TOT: When TOT is selected, LCD would display TOT remaining time when transmitting. And TOT would count down till remaining time is 0, for example: “170” displayed on the LCD display.

Default: TF

⑩ RBF (ROGER BEEP Frequency Setting)

This menu is to select frequency of Roger Beep. The frequency range is 300KHZ—3KHZ. The shift step is 10HZ.

Default: 1050HZ

⑪RBT (ROGER BEEP Holding Time)

This menu is to select Roger Beep Holding Time from 50ms—1000ms. The shift step is

50ms.

Default: 500ms

⑿CFR (CW Side Tone Frequency)

This menu is to select CW Side Tone Frequency from 300HZ－3KHZ, the shift step is 10HZ.

Default: 1050HZ

⒀ TON (Transmitting Single-Tone Frequency)

This menu is to select Transmitting Single-Tone Frequency from 300HZ-3KHZ. The shift step is 10HZ.

Default: 1050HZ

OPERATING PROCEDURE TO RECEIVE

1. Be sure that power supply, microphone and antenna are connected to the proper connectors before going to the next step.
2. Turn the radio on by tuning VOLUME control clockwise
3. Rotate the VOLUME knob to set a comfortable listening level
4. SET the MODE switch to the desired mode.
5. Set the CHANNEL selector switch to select the desired channel.
6. Set the RF gain control full clockwise to maximum RF gain
7. Listen to the background noise from the speaker. Turn the SQUELCH control clockwise slowly until the noise disappears (no signal should be present). Leave the control at this setting. The Squelch is now properly adjusted. The receiver will remain quiet until a signal is actually received. Do not advance the control too far, or some of the weaker signals can not be heard.

OPERATING PROCEDURE TO TRANSMIT

1. Select the desired channel of transmission
2. Press the Push-To-Talk switch on the microphone and speak in a normal voice.

SPECIFICATIONS

General	
Frequency Range	25.615MHZ—30.105MHZ (Programmable)
Frequency Band	A/B/C/D/E/F
Channel	60 channels (programmable) in each band
Frequency Control	Phase-Locked-Loop Synthesizer
Frequency Step	10Hz、100 Hz、1K Hz、10K Hz
Frequency Tolerance	0.005%
Frequency Stability	0.001%
Temperature Range	-30℃to +50℃
Microphone	Plug-in dynamic; with push-to-talk /UP/DN/ASQ switch and coiled cord
Input Voltage	DC 13.8V normal, 15.9V max; 11.7V min Transmit: AM full mod 5A Receiver: Squelched 0.6A SSB 21W PEP output 6A
Size	28*25*6CM
Weight	1.85kg
Antenna Connector	UHF,SO239
TRANSMITTER	
Power Output	AM/FM/CW: 12W SSB: 21W(PEP)
Modulation	High and low level class B Amplitude Modulation: AM Varied Capacitance Frequency Modulation: FM
Inter-modulation Distortion	SSB: 3rd order, more than -25dB; 5th order, more than -35dB
SSB Carrier Suppression	55dB
Unwanted Sideband	50dB
Frequency Response	AM and FM: 450 to 2500HZ
Output Impedance	50ohms, unbalanced
Sensitivity	SSB: 0.25μV for 10dB(S+N)/N at greater than 1/2-watt of audio output AM:1.0μV for 10 dB(S+N)/N at greater than 1/2watt of audio output

	FM: 1.0 μV for 20 dB (S+N)/N at greater than 1/2 watt of audio output
Selectivity	AM/FM:6dB@3KHz,50dB @9KHz SSB: 6 dB@2.1KHz,60dB @3.3KHz
Image Rejection	More than 65dB
IF Frequency	AM/FM: 10.695 MHz 1st IF, 455 KHz 2nd IF SSB: 10.695 MHz
Adjacent-Channel Rejection	60dB AM/FM &70 dB SSB
RF Gain Control	45 dB adjustable for optimum signal reception
Automatic Gain Control(AGC)	Less than 10 dB change in audio output for inputs from 10 to 100,000 microvolt.
Squelch	Adjustable; threshold less than 0.5 μV. Automatic Squelch Control(only AM/FM) 0.5 μV
ANL	Switchable
Noise Blanker	RF type, effective on AM/FM and SSB
Audio Output Power	4 watts into 8 ohms
Frequency Response	300 to 2800 Hz
Built-in Speaker	8 ohms, round.
External Speaker(Not Supplied)	8 ohms; disables internal speaker when connected.