Uniden®

# PRO5050

## AM-CB Transceiver

For more exciting new products please visit our website:
Australia: www.uniden.com.au

# OWNER'S MANUAL

Downloaded from www.cbradio.nl

# Contents


**Introduction** **3**
**Controls & Connectors** **5**
**Indicators** **7**
**Included with your PRO5050** **8**
**Optional Accessories** **9**
**DIN Installation** **10**
**Connecting the Microphone** **12**
**Mounting the MIC Hanger** **13**
**Operation** **14**
Turning on the Power 14
Setting the Volume 14
Setting the Manual Squelch 15
Monitor 15
Selecting a Channel 16
Programming the Instant Priority Channel 16
Recalling the Instant Channel 16
Transmitting 16
Call Tone Function (Wake Up Tones) 17
DUAL Watch 17
Scanning 18
Open Scan (OS) Mode 19
Group Scan (GS) Mode 19
Priority Watch 20
Add/Remove Channels from SCAN Memory 20
Selecting the Call Tone 21
Busy Channel Lockout 21
Roger Beep 22
Key Beep On/Off 22
Backlight Level 23
Backlight Colour 23
ANL/NB (Automatic Noise Limiter + Noise Blanker) 23
**AM CB Channels & Frequencies** **24**
**Warranty** **25**

# Introduction

The Uniden PRO5050 is designed to provide you with years of trouble free service. Its rugged components and materials are capable of withstanding harsh environments. Please read this Operating Manual carefully to ensure you gain the optimum performance of the unit.

NOTE

The citizen band radio service is licenced in Australia by ACMA Radio-communications (Citizen Band Radio Stations) Class Licence and in New Zealand by MBIE General User Licence for Citizen Band Radio and operation is subject to conditions contained in those licenses.

## Features

- Transmit & Receive 40 channels (AM-CB
- Transmission Power 5W
- LCD Display with Backlight
- LCD Backlight brightness control (HI/LO/OFF)
- Mobile DIN Size
- Front Speaker
- Signal Strength and RF Power (S/RF) Meter
- Automatic Noise Limiter + Noise Blanker (ANL/NB)
- Instant Priority Channel Programming
- One touch Instant Priority Channel recalling
- Dual Watch with Instant Priority Channel
- Group Scan and Priority Watch
- Open Scan
- Scan Channel Memory On/Off separately with Open Scan, Group Scan
- Rotary Channel Select
- Busy Channel Lock-out Function
- Roger Beep Function On/Off
- 5 Different Call Tones
- Front and Rear MIC Jacks for increased mounting options
- Channel Monitor
- 12/24 Volt input
- Battery Voltage Alert

## Preventive Maintenance

The following system checks should be made every six to twelve months:

- Check the Standing Wave Ratio (SWR).
- Inspect the tightness of all electrical connections.
- Inspect the antenna coaxial cable for wear or breaks on the shielding.
- Inspect the tightness of all screws and other mounting hardware.

## Troubleshooting

Should the unit malfunction or perform poorly, follow these procedures:

If the transceiver is completely inoperative: Check the power cord and fuse.
If there is trouble with receiving: Check the VOLUME control setting. Be sure the SQUELCH is adjusted properly. Possibly the radio is over-squelched.

If there is trouble with transmitting: Check that the transmission line (coaxial cable) is securely connected to the ANTENNA connector. Check that the antenna is fully extended for proper operation. Check that all transmission line (coaxial cable) connections are secure and free of corrosion.

# Controls & Connectors

## PRO5050 Base Front View

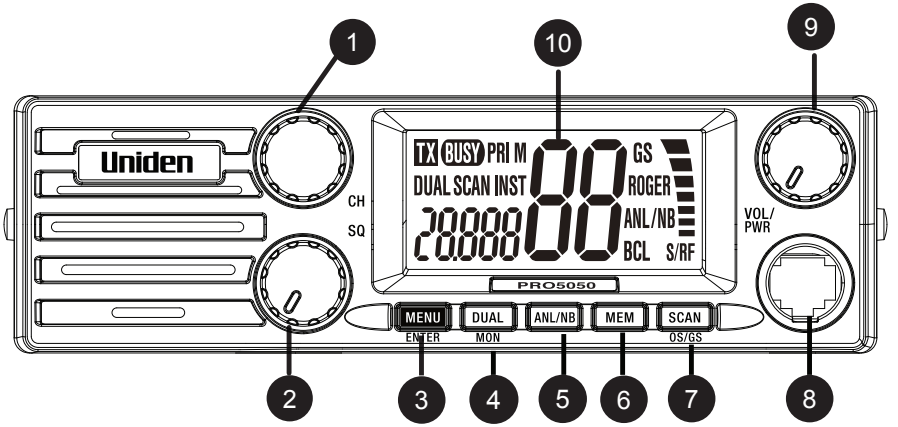


### Controls and Connectors

1 CH - Rotary CHANNEL Selector
2 SQ - Rotary Squelch control
3 MENU/ENTER - Menu and Select button
4 DUAL/MON- Dual watch and Monitor button
5 ANL/NB - Automatic Noise Limiter+ Noise Blanker
6 MEM - Memory Scan Channels
7 SCAN - Scan On/Off
OS/GS - Open or Group Scan
8 MIC - Front Microphone Jack
9 VOL/PWR - Rotary Volume Control
Power On/Off Push control
10 Liquid Crystal Display (LCD)

## PRO5050 Base Rear View

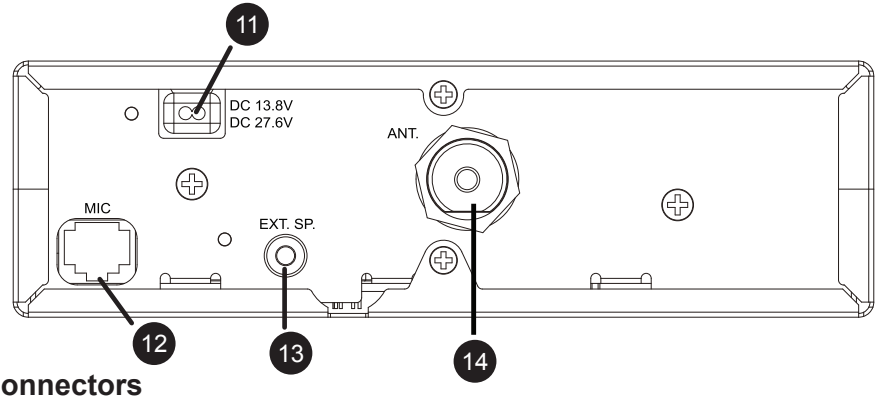


### Connectors

11 Power Input Connection
12 Rear MIC Jack
13 External Speaker Jack
14 Antenna Connection

# Controls & Connectors

## Standard Microphone

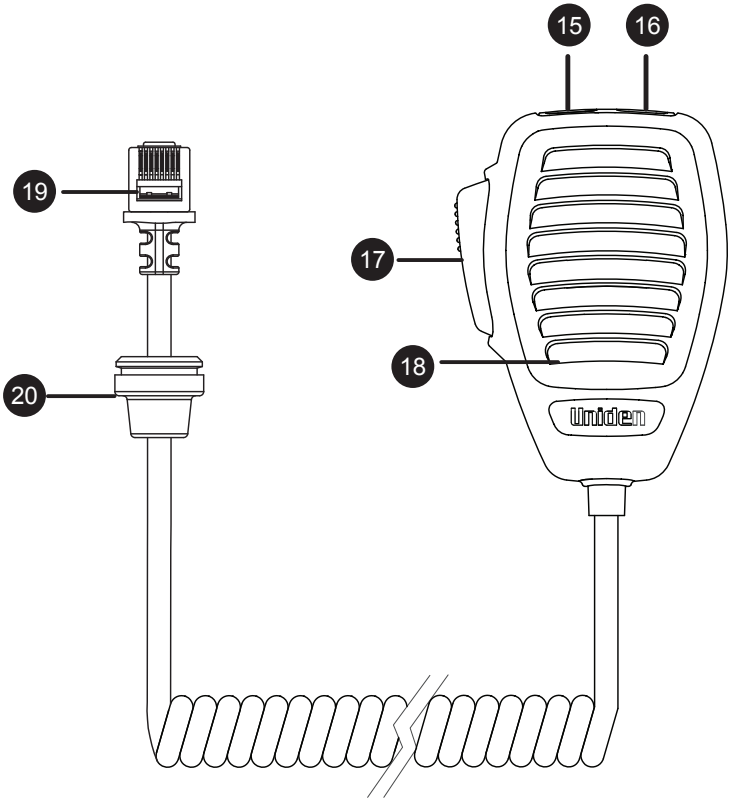


### Controls and Connectors

15 CALL - Call Tone Button
16 INST - Instant Channel Button
17 PTT - Push To Talk Button
18 MICROPHONE
19 RJ45 type plug
20 Front MIC Jack Cover

# Indicators

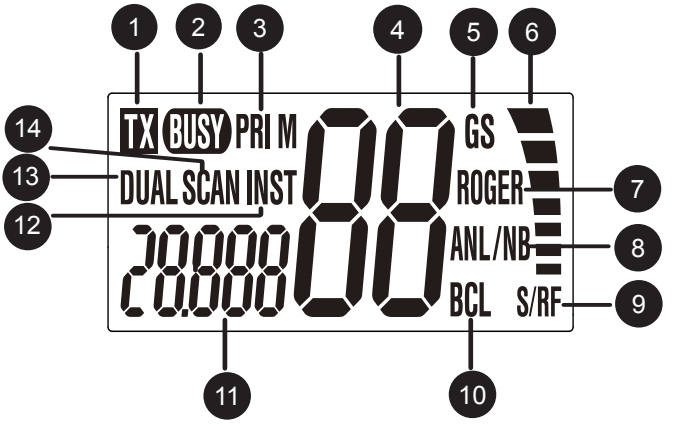


1 **TX** - Transmit
2 **BUSY** - Busy
3 **PRI M** - Priority Channel Watch
Channel in Memory
4 Channel Number
5 **GS** - Group Scan
6 Signal Power Level
7 **ROGER -** Roger Beep
8 **ANL/NB** - Automatic Noise Limiter+Noise Blanker
9 **S/RF**- Receive Signal or Transmit
10 **BCL** - Busy Channel Lockout
11 Channel Frequency
12 **INST** - Instant Channel
13 **DUAL** - Dual Watch
14 **SCAN** - Scanning

# Included with your PRO5050 Transceiver

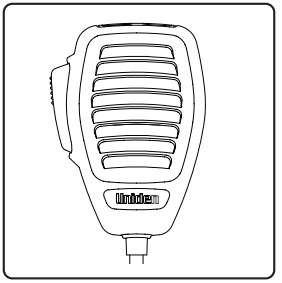

Standard Microphone
(MK800(s))

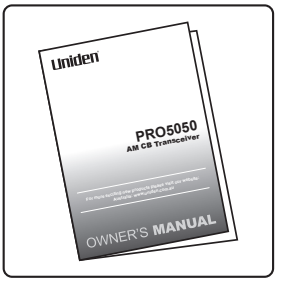


Owner's Manual

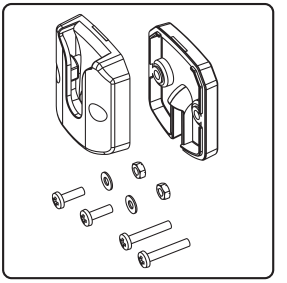

Microphone Hanger with
screws, washers

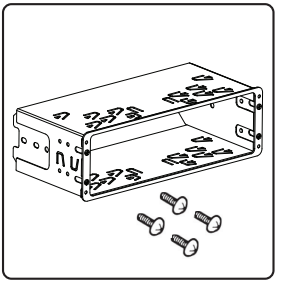

Din Mount Sleeve,
Removable Bracket &
Screws

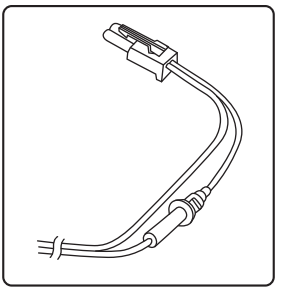

DC Power Cord
with fuse

# Optional Accessories

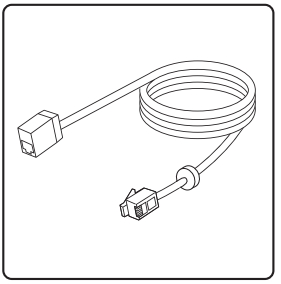

Extension Cable
(EC 770)

External Speaker (MS100)

# DIN Installation

## Mounting Using the DIN Bracket

If you are unsure about how to install your radio in your vehicle using the DIN bracket, consult your automobile manufacturer, dealer, or a qualified installer. The DIN bracket is made up of a sleeve and a frame.

Before installing, confirm that your radio fits in the desired mounting area and you have all the necessary materials to complete the task.

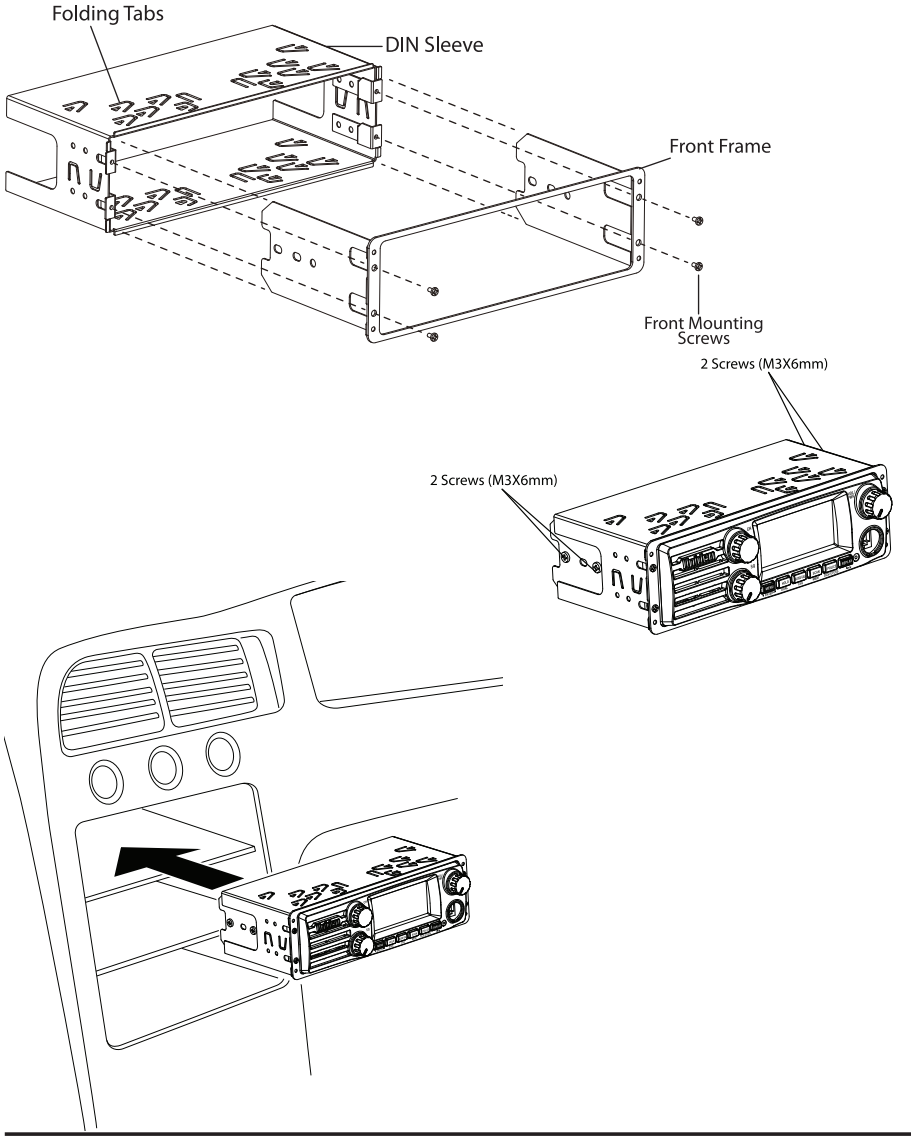

# DIN Installation

**Installing the DIN Bracket**

1. Remove the 4 front mounting screws to separate the front frame from the DIN sleeve.

2. Install the DIN sleeve into the DIN slot of your dashboard and secure it by bending the top and bottom folding tabs.

3. Slide the PRO5050 into the front frame. Ensure the threaded holes on PRO5050 line up with holes on the front frame.

4. Secure PRO5050 onto the front frame using 4 pieces of 6mm screws.

5. Attach the DC power leads to PRO5050 and your vehicle. RED goes to a positive (+) connection on your fuse block while BLACK connects to the vehicle chassis ground (-).

6. Attach the antenna cable, rear MIC and rear speaker to the back of PRO5050 if using.

7. Make sure all the connections are routed away from any potentially pinching or slicing sheet metal.

8. Slide the front frame (with PRO5050 attached and all cable connections done) back into the DIN sleeve and secure it using 4 front mounting screws.

If you plan to use the Rear MIC Jack or connect an external speaker at a later time, expect to remove the unit for ease of making those connections.

# Connecting the Microphone

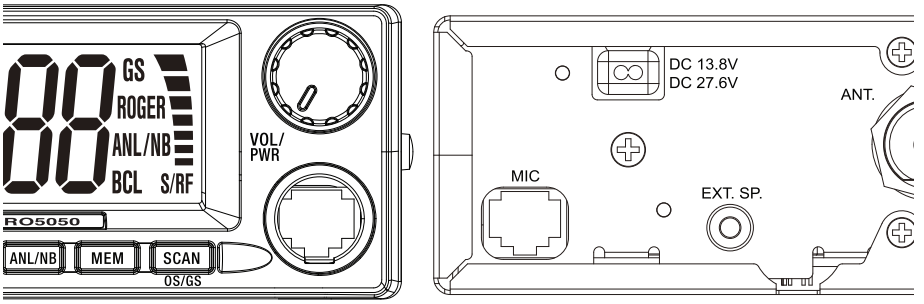


## Front MIC Jack

Push the MIC plug at the end of the microphone into the MIC jack until the connection locks into place. Gently tug the MIC cord to test that the connection is locked. Use the Front MIC Jack cover which is threaded onto the MIC cord to seal the MIC jack entry from dust.

## Disconnecting the MIC from the Front MIC Jack

Pull away the threaded rubber collar and move it down along the cord. Using the flat blade of a screwdriver or similar object carefully press the lock tab at the bottom of the MIC plug and push it upwards. At the same time tug on the MIC cord to draw back the MIC plug.

## Rear MIC Jack

Use the Rear MIC Jack if the main base is mounted where a front MIC connection is intrusive.

Peel the dust cover from the rear MIC jack. Push the MIC plug at the end of the microphone into the MIC jack until the connection locks into place. An optional 2m extension cable kit is available to enable mounting the main base in a hidden location.

# Mounting the MIC Hanger

The Microphone Hanger comes in two parts. How and where you mount the MIC hanger will determine which parts to use.

## Conventional Mounting with Screws

Use the front part of the MIC Hanger only.
Locate a suitable mounting position and mark and drill two 3mm holes.
Fix the MIC Hanger into place with screws.

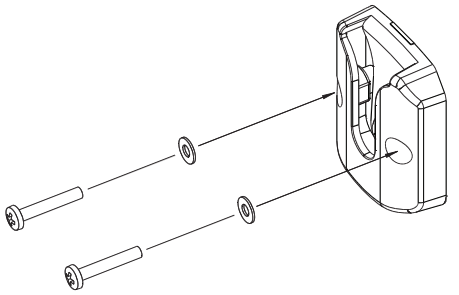

## Conventional Mounting with Double Sided Tape (not supplied)

High quality Double-Sided tape can be found at good retail stores.
Secure the front and back pieces of the MIC Hanger using the supplied binding screws.

Locate a suitable mounting position.

Apply high quality Double-Sided tape onto the flat area of the MIC Hanger back piece and then press firmly to the mounting position.

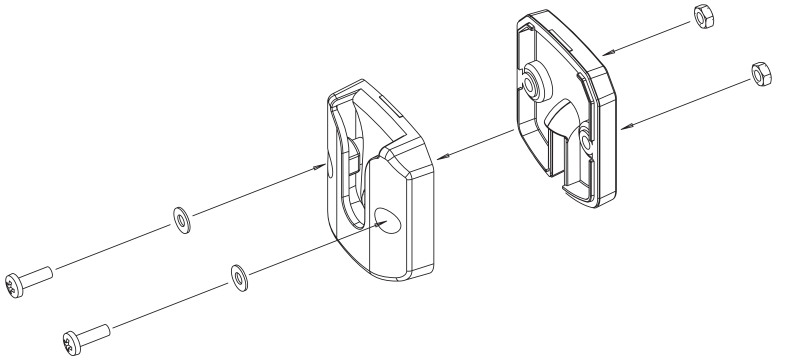

# Operation

## Turning on the Power

Press and hold **[VOL/PWR]** control at the base.

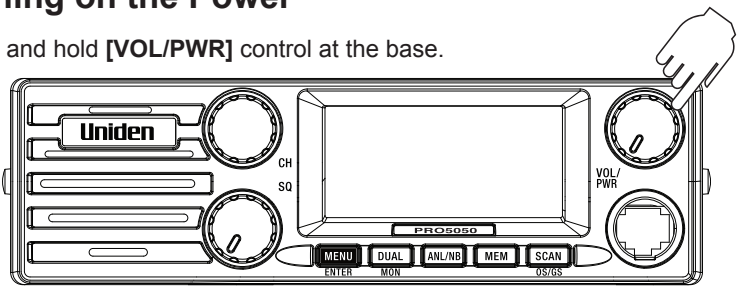


NOTE

**Low-Voltage/High-Voltage Alert**

The PRO5050 can operate on 12VDC (13.8V) or 24VDC (27.6V) power supply, with the range between 10.2VDC to 28.8VDC.

If the power supply voltage exceeds 28.8VDC, an alert tone sounds and **HI DC** flashes for 5 seconds. The power source must not exceed 32VDC otherwise permanent damage may occur to your radio, which may not be covered by the manufacturer's warranty.

If the input voltage falls below 10.2VDC, **LO DC** flashes for 5 seconds. The power turns off automatically if voltage falls below 9.0VDC.

Switch your PRO5050 OFF and disconnect it from the power source, before locating the cause of the power supply problem.

## Setting the Volume

Turn the volume control at the base.

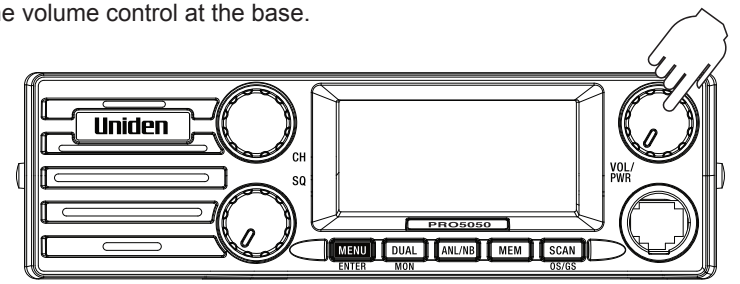

## Setting the Manual Squelch

Turn the rotary of the SQ control at the base to adjust the Squelch.

NOTE

You must select a channel which is not in use before setting the SQUELCH control. (see p.16 for “Selecting a Channel”).

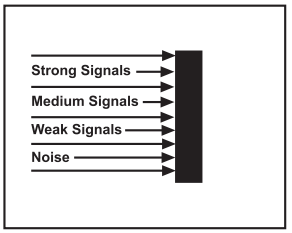


Think of the squelch control as a gate. If you turn Squelch fully clockwise it raises the‘Squelch gate’ so high that no signals get through.

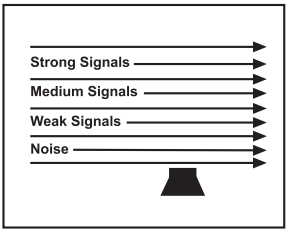


If you turn Squelch fully counter clockwise it lowers the ‘Squelch gate’ so low that noise gets through.

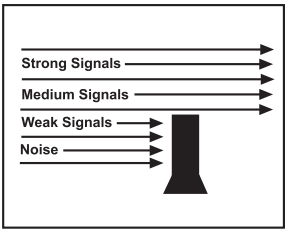


To set the ‘Squelch Gate’ to the desired level, turn the squelch knob counterclockwise until you hear noise. Then carefully turn the Squelch knob clockwise until the noise fades. Now only strong signals get through.

## Monitor

Press and hold **[DUAL/MON]** at the base to open the squelch and receive all weak signals. Press and hold **[DUAL/MON]** at the base to cancel.

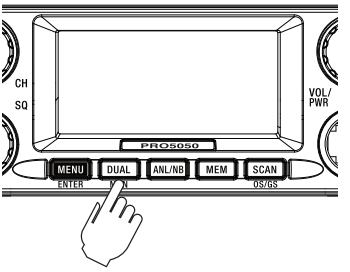

# Operation

## Selecting a Channel

Turn the Rotary Channel Selector at the base to select the desired channel.

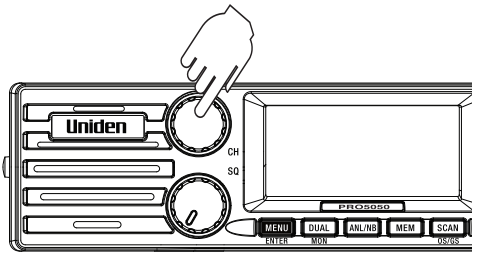


NOTE

For your reference a list of the available channels, corresponding frequencies and guidelines for their use is printed on p.24.

## Programming the Instant Priority Channel

Turn the Rotary Channel Selector at the base to select the Priority Channel you prefer.

Press and hold **[INST]** for 2 seconds to store the new setting. INST icon appears to designate the Instant channel.

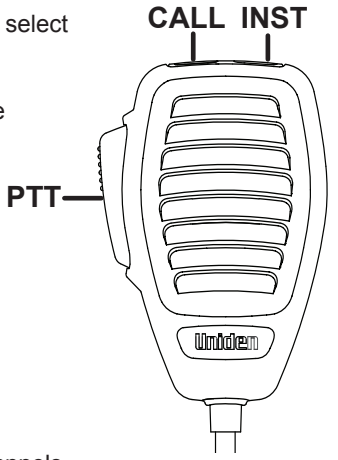


## Recalling the Instant Channel

Momentarily press **[INST]** to return to the Instant Channel. Press **[INST]** again to return to the previous channel.

## Transmitting

The PRO5050 transmits only on 40 AM-CB Channels.

Select the desired channel. Press the microphone's **[PTT]** button an speak normally into the microphone. Hold it approx. 7cm from your mouth. Release **[PTT]** to end the transmission and listen for a reply.

## Call Tone Function (Wake Up Tones)

Press the microphone **[CALL]** Button. A three second wake up ringing tone will be transmitted.

You may select from 5 types of tones (see p.21).

NOTE

Current regulations require calling tones to be restricted to one transmission per minute. If a second transmission is attempted within one minute then an error tone will sound.

## DUAL Watch

Dual watch will continuously monitor the Instant channel and the current channel for activity (see Programming the Instant Priority Channel, p.16).

Press **[DUAL/MON]**. DUAL icon appears and two beeps will sound.

To cancel DUAL Watch press **[DUAL/MON]**. DUAL icon disappears.

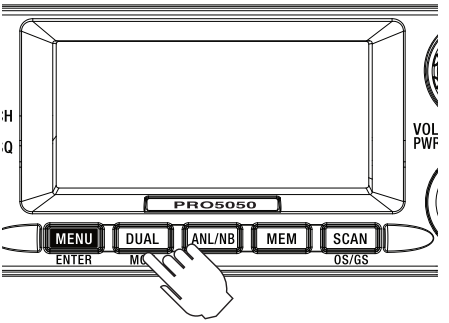


NOTE

- Every 1.5 seconds the Instant channel is monitored for 100msec.
- Dual watch function stops temporarily when receiving a signal.
- Dual watch function is invalid in Scan mode.

## Scanning

The AM CB Radio has a scanning feature that allows you to search for active channels automatically.

Furthermore, the AM CB Radio is designed to have two types of scanning; Open Scanning (OS) and Group Scanning (GS), to give you flexibility and allow you to use the radio more effectively.

Press **[SCAN/OS/GS]** and Scanning starts.
The SCAN icon appears.The scan direction can be changed at any time by rotating the channel selector left or right.

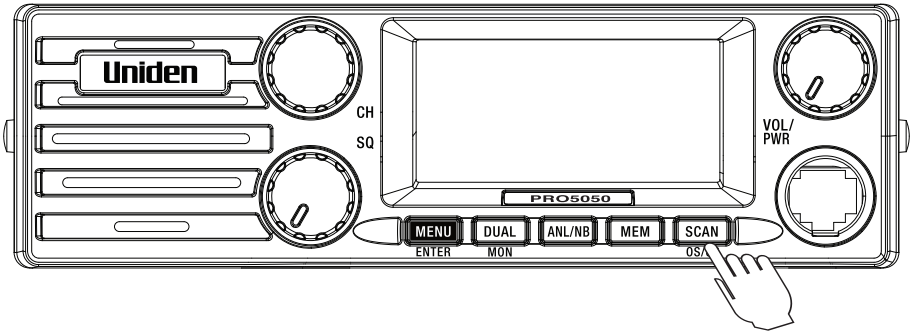


NOTE

By default, all channels will be added into scan memory for OS and no channels will be added for GS. Please add/ remove channels according to your preference, see p20.

# Operation

## Open Scan (OS) Mode

Allows continuous scanning of all selected channels. If an active channel is found, scanning will stop on that channel. If the received signal ceases, the unit will wait 3 seconds for the signal to return, otherwise scanning resumes.

After transmission in scan mode, the unit will wait 20 seconds for the signal to return, otherwise scanning resumes. To skip the active channel, turn the Rotary Channel Selector at the base. To deactivate SCAN, press **[SCAN/OS/GS]**.

NOTE

If SCAN is deactivated while on an active channel, the AM CB Radio will stay on that active channel. If no channels are active, the AM CB Radio will reinstate the starting channel.

NOTE

OS Mode is indicated by the absence of the GS icon.

## Group Scan (GS) Mode

Includes the accessory feature Priority Watch which allows you to monitor the Instant Priority Channel while scanning (see p.16 for setting Instant Priority Channel and p.20 to turn on Priority Watch).

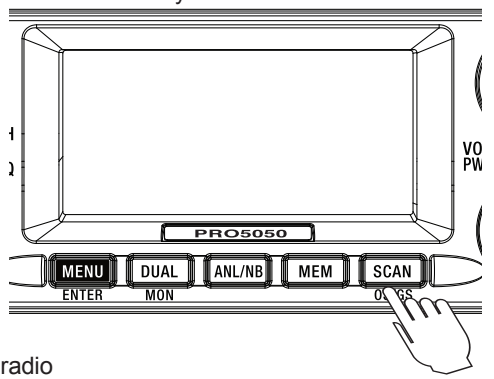


To use GS Mode Scanning, press and hold **[SCAN/OS/GS].** GS icon appears on the display.

GS Scanning checks the Instant Priority Channel for activity regularly when Priority Watch is ON.

If the Priority Channel becomes active the radio will stay on that channel for as long as the signal is present. If the received signal ceases, Priority Scanning continues after 3 seconds.

If scanning stops on a channel which is not a Priority Channel, AM CB Radio will continue monitoring the Priority Channel for activity while listening to the active one. To deactivate SCAN, press the **[SCAN/OS/GS]** button.

## Priority Watch

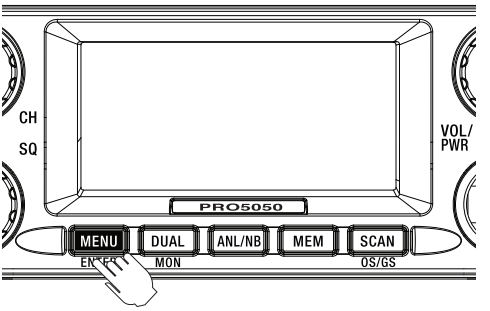


To switch Priority Watch On/Off;

1. Press **[MENU/ENTER]**.
   The Priority Watch setting flashes.
2. Turn the Rotary Channel Selector to change the setting between ON or OFF.
3. Press and hold **[MENU/ENTER]** to save & exit from the menu mode.

NOTE

If SCAN is deactivated while it is tuned to an active channel, the PRO5050 will stay on that active channel. If none of the channels are active, the PRO5050 will reinstate the scan start channel.

NOTE

If OS/GS Scanning is initiated when there are no channels programmed in OS/GS memory, an error tone will be heard and scanning will not start (see Add/Remove Channels from SCAN Memory).

## Add/Remove Channels from Scan Memory

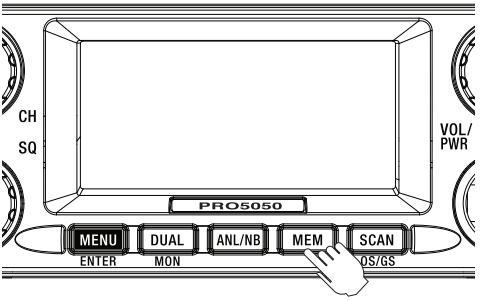


Select which Scanning Mode you wish to use - OS or GS.

Press and hold **[SCAN/OS/GS]** to switch between scanning mode.

Select the channel you want to store.

Press to **[MEM]** store. **[M]** icon appears and a short tone beep is heard.

To remove the channel from SCAN memory, press **[M]** once more.

The MEM icon disappears.

# Operation

## Selecting the Call Tone

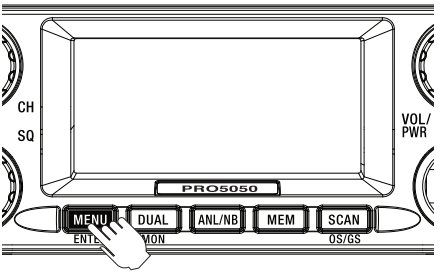


1. Press **[MENU/ENTER]** two times.
   The Call Tone setting flashes.

2. Turn the Rotary Channel Selector to change the setting between 1, 2, 3,4 and 5.

3. Press and hold **[MENU/ENTER]** to save & exit from the menu mode.

NOTE

If a button is not pressed within 10 seconds the PRO5050 will automatically exit the Menu Mode.

## Busy Channel Lockout

If the channel is already in use, you can prevent the AM CB Radio from transmitting.

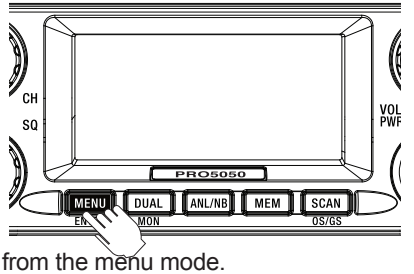


1. Press **[MENU/ENTER]** three times.
   The BCL setting flashes.

2. Turn the Rotary Channel Selector to change the setting between ON or OFF.

3. Press and hold **[MENU/ENTER]** to save & exit from the menu mode.

NOTE

If a button is not pressed within 10 seconds the PRO5050 will automatically exit the Menu Mode.

# Operation

## Roger Beep

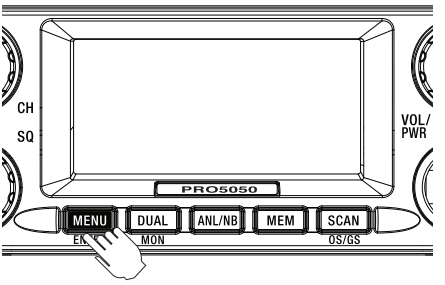


1. Press **[MENU/ENTER]** four times. The roger beep **(rb)** setting flashes.
2. Turn the Rotary Channel Selector to change the setting between ON or OFF.
3. Press and hold **[MENU/ENTER]** to save & exit from the menu mode.

NOTE

If a button is not pressed within 10 seconds the Radio will automatically exit the Menu Mode.

## Key Beep On/Off

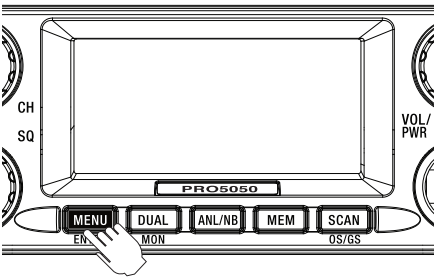


1. Press **[MENU/ENTER]** five times. The Beep setting flashes.
2. Turn the Rotary Channel Selector to change the setting between ON or OFF.
3. Press and hold **[MENU/ENTER]** to save & exit from the menu mode.

NOTE

If a button is not pressed within 10 seconds the Radio will automatically exit the Menu Mode.

# Operation

## Backlight Brightness

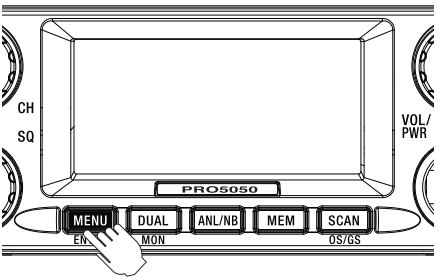


1. Press **[MENU/ENTER]** six times. The Backlight level **(LIGHT)** setting flashes.
2. Turn the Rotary Channel Selector to change the setting between Off, Hi and Lo.
3. Press and hold **[MENU/ENTER]** to save & exit from the menu mode.

NOTE

If a button is not pressed within 10 seconds the Radio will automatically exit the Menu Mode.

## Backlight Colours

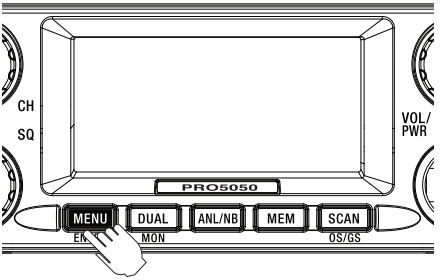


1. Press **[MENU/ENTER]** seven times. The Backlight setting flashes.
2. Turn the Rotary Channel Selector to change the desired colour setting between Or (Orange) and Gr (Green).
3. Press and hold **[MENU/ENTER]** to save & exit from the menu mode.

NOTE

If a button is not pressed within 10 seconds the Radio will automatically exit the Menu Mode.

## ANL/NB (Automatic Noise Limiter + Noise Blanker)

ANL/NB will reduce the harsh background noide caused by some interference.

Press **ANL/NB** the ANL/NB icon appears.

# AM CB Channels & Frequencies

NOTE

The PRO5050 will operate on the frequencies of the country of original purchase. The frequencies cannot be changed from one country to another. It is illegal to operate a PRO5050 set on Australian frequencies in New Zealand or a PRO5050 set on New Zealand frequencies in Australia.

Road Channel for Australia/New Zealand Model is shown in BOLD in the table. Modulation: AM, Transmit Power (each channel): 4W

| CH NO. Australia | Frequency (MHz) | CH NO. New Zealand | Frequency (MHz) |
|---|---|---|---|
| 01 | 26.965 | 01 | 26.330 |
| 02 | 26.975 | 02 | 26.340 |
| 03 | 26.985 | 03 | 26.350 |
| 04 | 27.005 | 04 | 26.370 |
| 05 | 27.015 | 05 | 26.380 |
| 06 | 27.025 | 06 | 26.390 |
| 07 | 27.035 | 07 | 26.400 |
| **08** | **27.055** | 08 | 26.420 |
| 09 | 27.065 | 09 | 26.430 |
| 10 | 27.075 | 10 | 26.440 |
| 11 | 27.085 | 11 | 26.450 |
| 12 | 27.105 | 12 | 26.470 |
| 13 | 27.115 | 13 | 26.480 |
| 14 | 27.125 | 14 | 26.490 |
| 15 | 27.135 | **15** | **26.500** |
| 16 | 27.155 | 16 | 26.520 |
| 17 | 27.165 | 17 | 26.530 |
| 18 | 27.175 | 18 | 26.540 |
| 19 | 27.185 | 19 | 26.550 |
| 20 | 27.205 | 20 | 26.570 |
| 21 | 27.215 | 21 | 26.580 |
| 22 | 27.225 | 22 | 26.590 |
| 23 | 27.255 | 23 | 26.620 |
| 24 | 27.235 | 24 | 26.600 |
| 25 | 27.245 | 25 | 26.610 |
| 26 | 27.265 | 26 | 26.630 |
| 27 | 27.275 | 27 | 26.640 |
| 28 | 27.285 | 28 | 26.650 |
| 29 | 27.295 | 29 | 26.660 |
| 30 | 27.305 | 30 | 26.670 |
| 31 | 27.315 | 31 | 26.680 |
| 32 | 27.325 | 32 | 26.690 |
| 33 | 27.335 | 33 | 26.700 |
| 34 | 27.345 | 34 | 26.710 |
| 35 | 27.355 | 35 | 26.720 |
| 36 | 27.365 | 36 | 26.730 |
| 37 | 27.375 | 37 | 26.740 |
| 38 | 27.385 | 38 | 26.750 |
| 39 | 27.395 | 39 | 26.760 |
| 40 | 27.405 | 40 | 26.770 |

# Warranty

## UNIDEN PRO5050 Transceiver

**IMPORTANT: Satisfactory evidence of the original purchase is required for warranty service**

Please refer to our Uniden website for any details or warranty durations offered in addition to those contained below.

**Warrantor:** The warrantor is Uniden Australia Pty Limited ABN 58 001 865 498 ("Uniden Aust").

**Terms of Warranty:** Uniden Aust warrants to the original retail purchaser only that the PRO5050 Transceiver ("the Product"), will be free from defects in materials and craftsmanship for the duration of the warranty period, subject to the limitations and exclusions set out below.

**Warranty period:** This warranty to the original retail purchaser is only valid in the original country of purchase for a Product first purchased either in Australia or New Zealand.

| | |
|---|---|
| Product | 5 Years |
| Accessories | 1 Year |

If a warranty claim is made, this warranty will not apply if the Product is found by Uniden to be:

(A) Damaged or not maintained in a reasonable manner or as recommended in the relevant Uniden Owner's Manual;
(B) Modified, altered or used as part of any conversion kits, subassemblies or any configurations not sold by Uniden Aust;
(C) Improperly installed contrary to instructions contained in the relevant Owner's Manual
(D) Repaired by someone other than an authorized Uniden Repair Agent in relation to a defect or malfunction covered by this warranty; or
(E) Used in conjunction with any equipment, parts or a system not manufactured by Uniden.

**Parts Covered:** This warranty covers the Product and included accessories.

**User-generated Data:** This warranty does not cover any claimed loss of or damage to user-generated data (including but without limitation phone numbers, addresses and images) that may be stored on your Product.

**Statement of Remedy:** If the Product is found not to conform to this warranty as stated above, the Warrantor, at its discretion, will either repair the defect or replace the Product without any charge for parts or service. This warranty does not include any reimbursement or payment of any consequential damages claimed to arise from a Product's failure to comply with the warranty.

# Warranty

Our goods come with guarantees that cannot be excluded under the Australian Consumer Law. You are entitled to a replacement or refund for a major failure and for compensation for any other reasonably foreseeable loss or damage. You are also entitled to have the goods repaired or replaced if the goods fail to be of acceptable quality and the failure does not amount to a major failure.

This warranty is in addition to and sits alongside your rights under either the COMPETITION AND CONSUMER ACT 2010 (Australia) or the CONSUMER GUARANTEES ACT (New Zealand) as the case may be, none of which can be excluded.

**Procedure for obtaining warranty service:** Depending on the country in which the Product was first purchased, if you believe that your Product does not conform with this warranty, you should deliver the Product, together with satisfactory evidence of your original purchase (such as a legible copy of the sales docket) to Uniden. Please refer to the Uniden website for the address details. You should contact Uniden regarding any compensation that may be payable for your expenses incurred in making a warranty claim. Prior to delivery, we recommend that you make a backup copy of any phone numbers, images or other data stored on your Product, in case it is lost or damaged during warranty service.

**UNIDEN AUSTRALIA PTY LTD**
Phone: 1300 366 895
Email: custservice@uniden.com.au

**THANK YOU FOR BUYING A UNIDEN PRODUCT.**

© 2015 Uniden Australia Pty Limited. Printed in Vietnam.
U01UT413ZZZ(0)