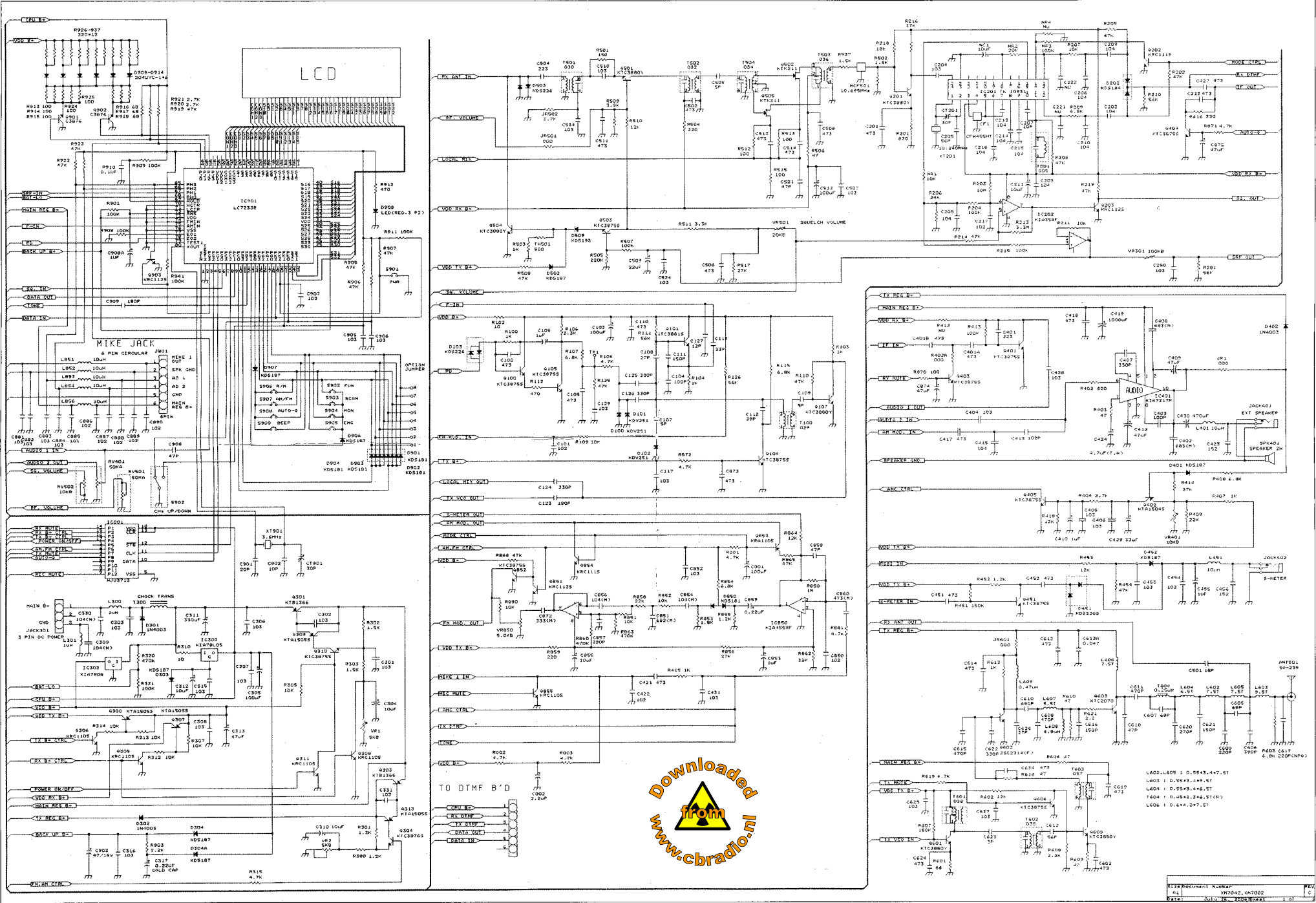

Downloaded from www.cbradio.nl